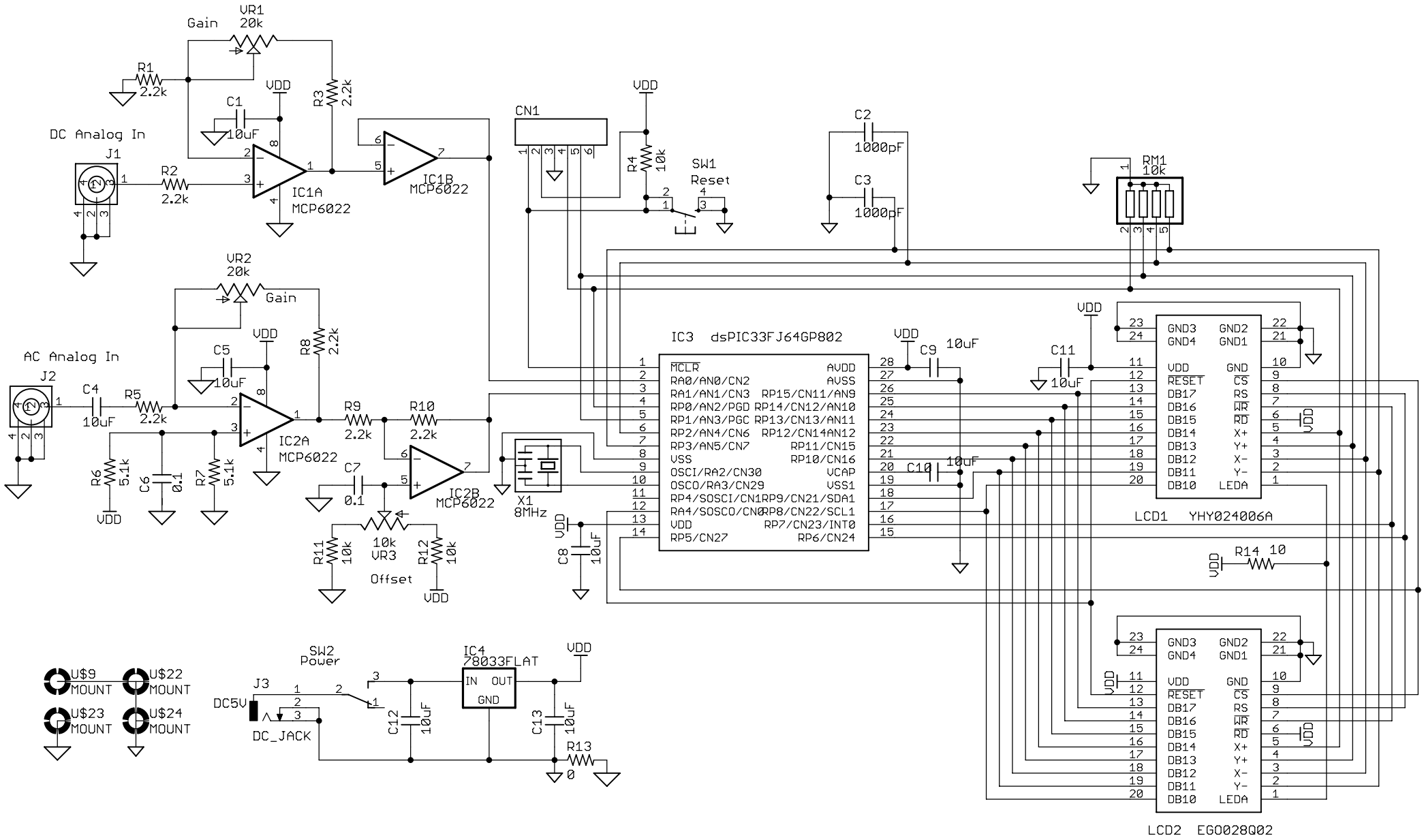

2010/03/31 17:45:08 D:\Eagle\Myproject\LCDBook\Scope\Scope.sch (Sheet: 1/1)